Rittal – The System.

Faster – better – everywhere.

Your Home4Energy

Infrastructure solutions for energy storage systems

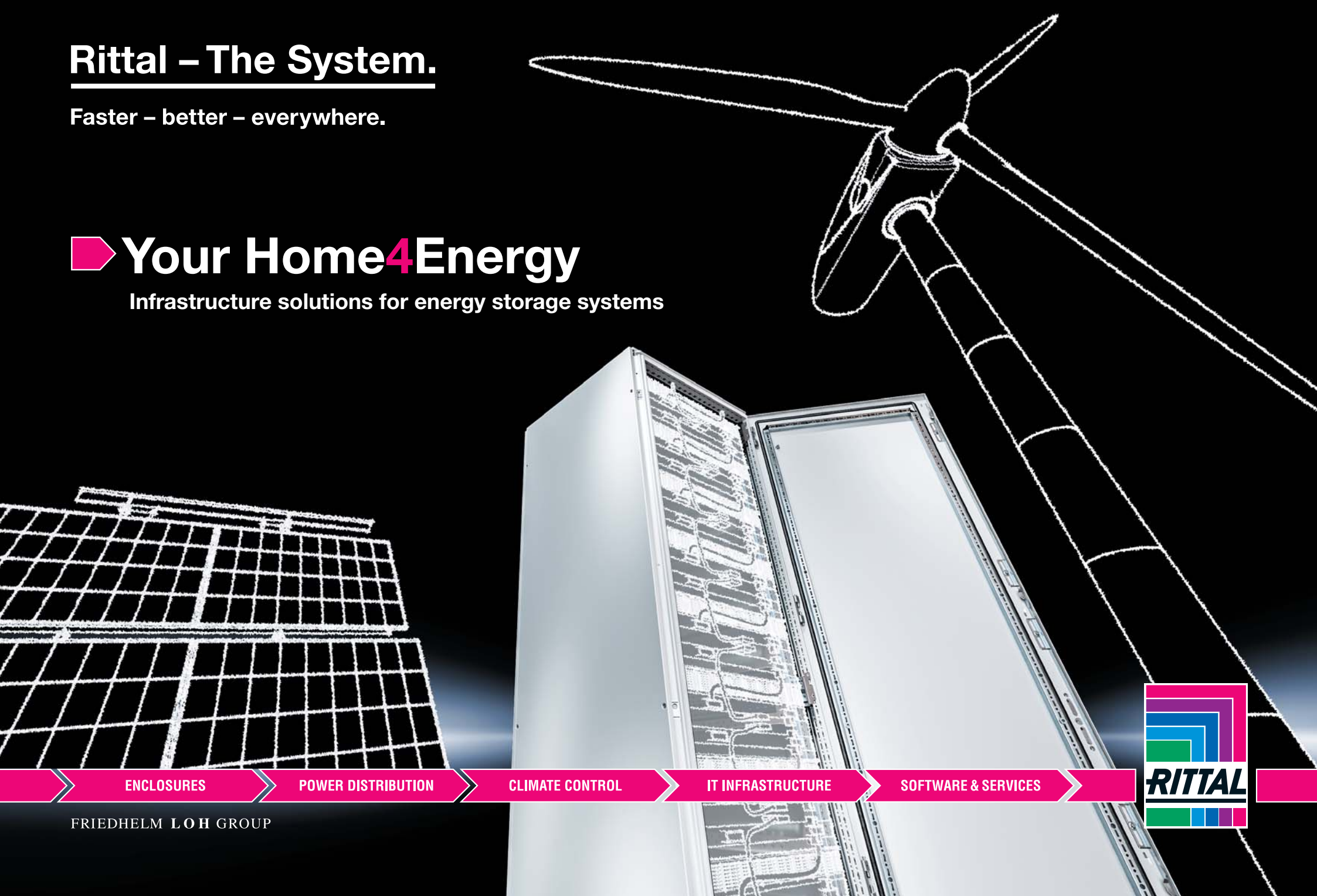

ENCLOSURES | POWER DISTRIBUTION | CLIMATE CONTROL | IT INFRASTRUCTURE | SOFTWARE & SERVICES

FRIEDHELM LOH GROUP

RITTAL

Rittal – The System.

Faster – better – everywhere.

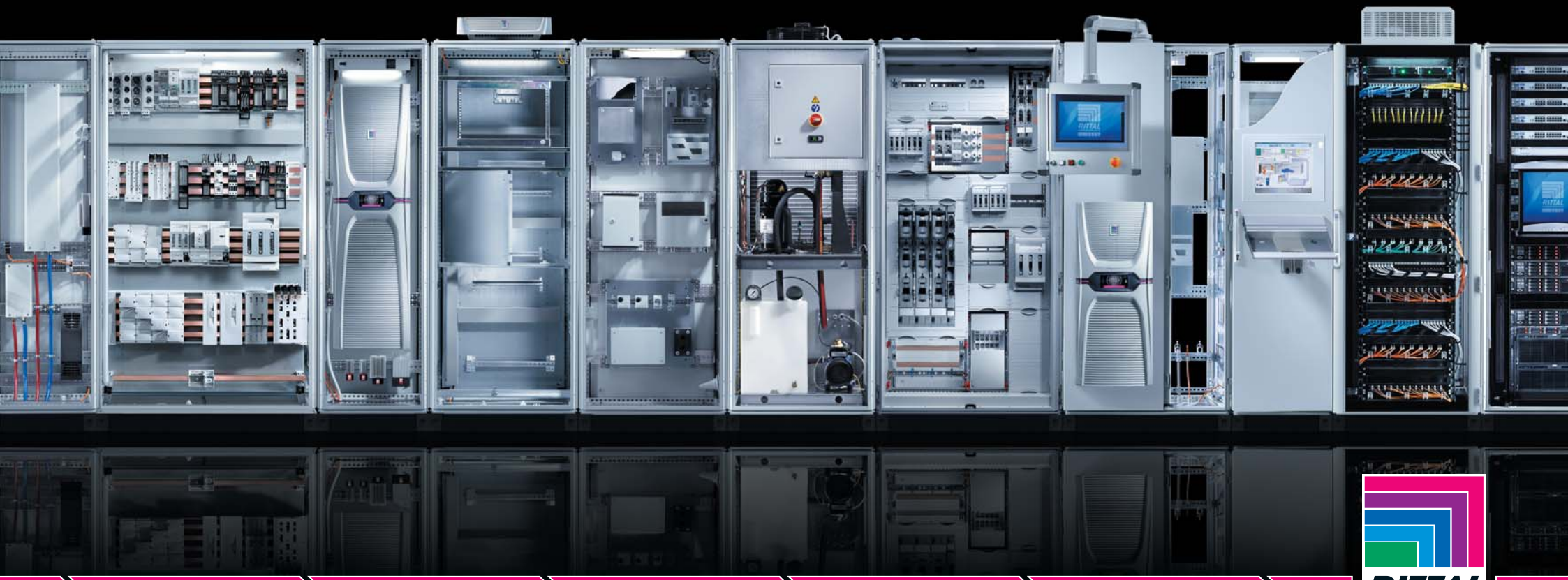

ENCLOSURES | POWER DISTRIBUTION | CLIMATE CONTROL | IT INFRASTRUCTURE | SOFTWARE & SERVICES

RITTAL

FRIEDHELM LOH GROUP

The whole is more than the sum of its parts

The same is true of “Rittal – The System.” With this in mind, we have bundled our innovative enclosure, power distribution, climate control and IT infrastructure products together into a single system platform. Complemented by our extensive range of software tools and global service, we create unique added value for all industrial applications: Production plant, test equipment, facility management and data centres. In accordance with our simple principle, “Faster – better – everywhere”, we are able to combine innovative products and efficient service to optimum effect.

Faster – with our “Rittal – The System.” range of modular solutions, which guarantees fast planning, assembly, conversion and commissioning with its system compatibility.

Better – by being quick to translate market trends into products. In this way, our innovative strength helps you to secure competitive advantages.

Everywhere – thanks to global networking across 150 locations. Rittal has over 60 subsidiaries, more than 150 service partners with over 1,000 service engineers worldwide. For more than 50 years, we have been on hand to offer advice, assistance and product solutions.

Rittal – The System.

Faster – better – everywhere.

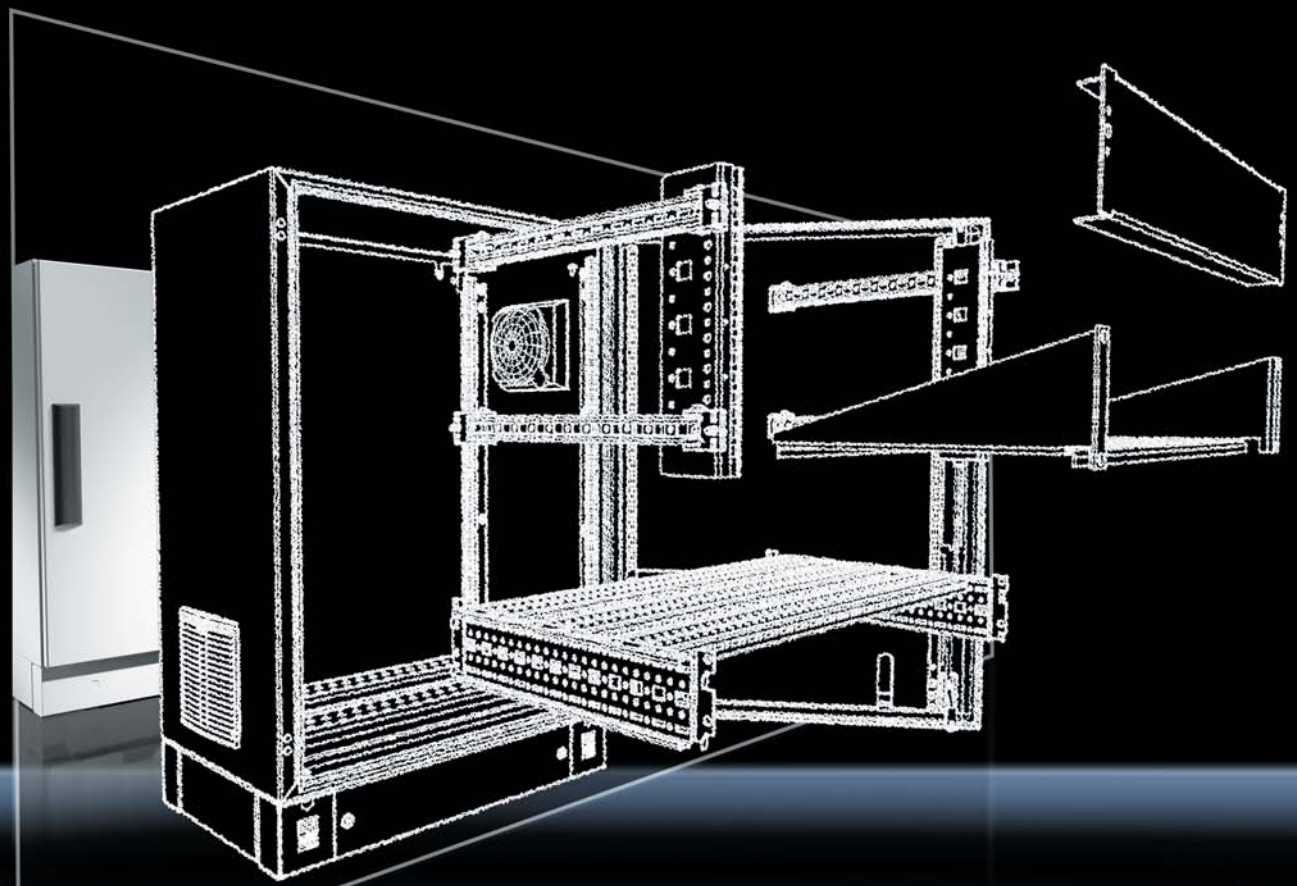



ENCLOSURES | POWER DISTRIBUTION | CLIMATE CONTROL | IT INFRASTRUCTURE | SOFTWARE & SERVICES

RITTAL

FRIEDHELM LOH GROUP

Solutions at a glance

Rittal offers you an ingenious and integrated concept combining consulting, software, products, service and support. A conclusive approach, but nevertheless open to all your individual contributions. Benefit from our proven expertise and long-standing experience. Put our promise to the test.

Take advantage of our comprehensive consulting services founded on years of practical experience:

- Analysis of tasks for new and existing projects
- Drafting of a concept
- Engineering support
- Process optimisation

Experience for yourself the benefits of our innovative modular system. Tested quality and optimum cost efficiency – available for immediate, worldwide delivery:

- Enclosures
- Power Distribution
- Climate Control
- IT Infrastructure
- Software & Services

Be amazed at how quickly and precisely your requirements can be implemented:

- High-quality, standard-compliant systems
- Individual solutions based on standardised products and accessories
- Extensive automation guarantees constant quality for practically all batch size
- Fast availability, even for large orders

Rittal – The System.

Faster – better – everywhere.

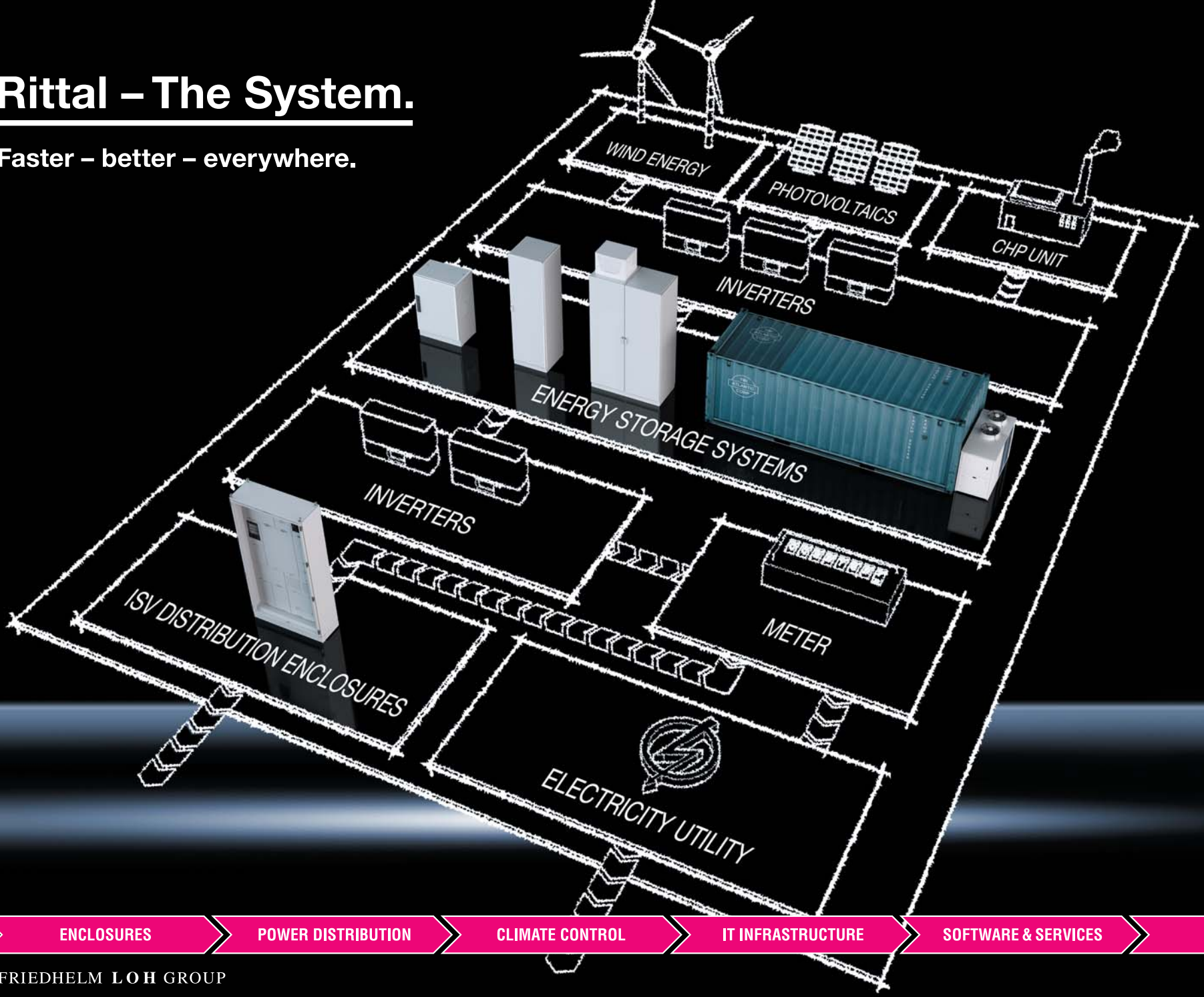

ENCLOSURES | POWER DISTRIBUTION | CLIMATE CONTROL | IT INFRASTRUCTURE | SOFTWARE & SERVICES

FRIEDHELM LOH GROUP

RITTAL

Our expertise for your energy

The efficiency of any system powered by renewable energy depends to a large extent on whether the energy can be stored. Only then will it still be possible to use the power generated even if the wind is not blowing, the sun is not shining or there is no biogas available. Rittal has the right system solutions to meet these storage tasks, be it for a photovoltaic system in a private residence, or an industrial-scale solar farm.

Compact and effective:

- Wall-mounted enclosures and floor-standing enclosures with high protection categories and international approvals
- Configured with heavy-duty shelves and 482.6 mm (19″) system technology
- Perfect, efficient climate control – with climate control components precisely tailored to your required output. From simple fan-and-filter units, to cooling units, to chillers with a cooling output of up to 450 kW.

Modular and flexible:

- Bayed enclosure systems support flexible, infinite baying
- High protection category and international approvals
- UL-tested busbar systems
- Optimum climate control even at high heat losses
- Perfect integration into a standard container if required

Reliable distribution:

- ISV distribution enclosures for reliable power distribution at all building levels
- Design verification to IEC 61 439
- Choice of devices from many different manufacturers, including: ABB, Eaton, General Electric, Mitsubishi, Schneider Electric, Siemens and Terasaki

Rittal – The System.

Faster – better – everywhere.

Enclosures



Power distribution

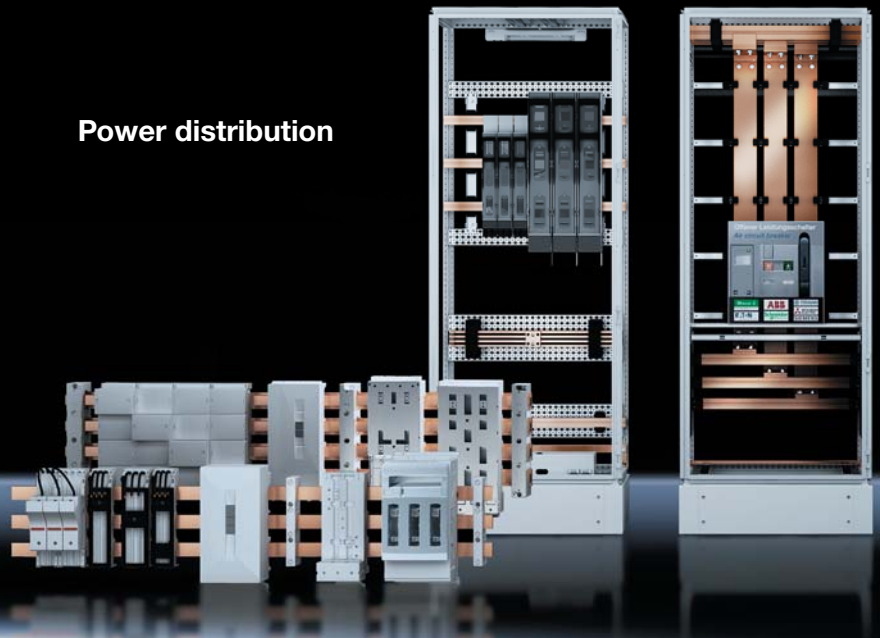

Our services:

- Planning
  Project management
- Design
  Calculation
  Verification

ENCLOSURES | POWER DISTRIBUTION | CLIMATE CONTROL | IT INFRASTRUCTURE | SOFTWARE & SERVICES

FRIEDHELM LOH GROUP

Modules for energy storage systems

Climate control



System accessories



Components
System technology

Virtual enclosure layout

Documentation

Delivery
and service

ENCLOSURES | POWER DISTRIBUTION | CLIMATE CONTROL | IT INFRASTRUCTURE | SOFTWARE & SERVICES

RITTAL

FRIEDHELM LOH GROUP

Rittal – The System.

Faster – better – everywhere.

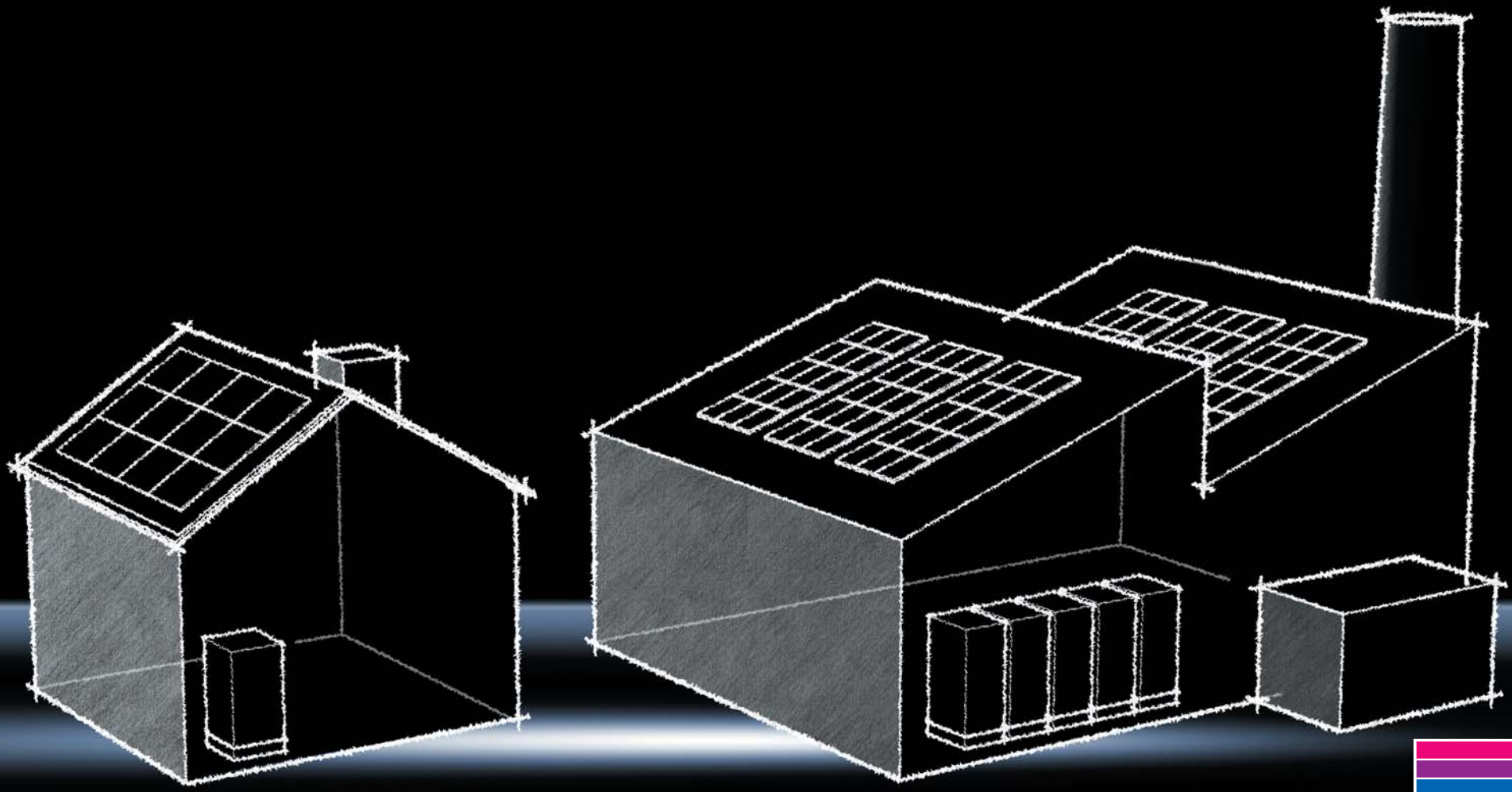

ENCLOSURES | POWER DISTRIBUTION | CLIMATE CONTROL | IT INFRASTRUCTURE | SOFTWARE & SERVICES

RITTAL

FRIEDHELM LOH GROUP

Optimum configuration

Secure, robust enclosure solutions are crucial when it comes to “Home4Energy”. To ensure that everything is perfectly tailored to your specific requirements, we have a range of configuration solutions to suit everyone. Our extensive modular system allows us to meet almost any challenge in a short space of time. Please contact us for advice.

Housings/enclosures/containers

Configuration with heavy-duty shelves

Configuration with 482.6 mm (19˝) system engineering

Configuration with heavy-duty shelves and 482.6 mm (19˝) system engineering combined



Rittal – The System.

Faster – better – everywhere.

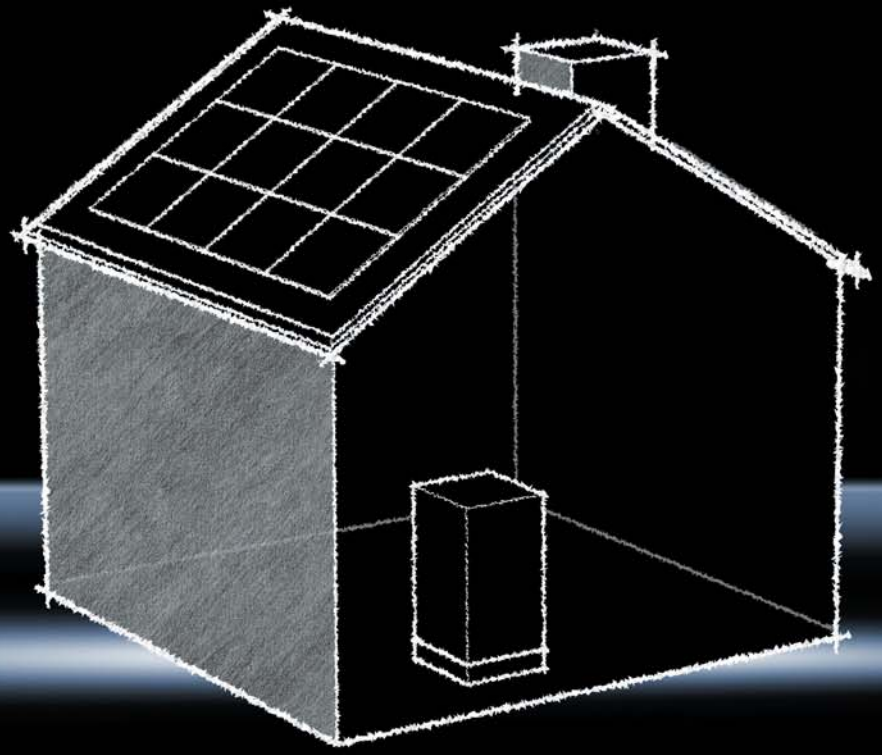

ENCLOSURES | POWER DISTRIBUTION | CLIMATE CONTROL | IT INFRASTRUCTURE | SOFTWARE & SERVICES

FRIEDHELM LOH GROUP

RITTAL

Compact solutions for residential buildings

In this field, a compact design, absolute safety and an attractive appearance stand in the foreground. The Rittal solution adapts seamlessly to the local circumstances. Irrespective of whether a wall-mounted or free-standing solution is required, Rittal supplies the matching enclosure. Ideally engineered and in ultimate series quality.

Situation



Enclosure



Climate control



Rittal – The System.

Faster – better – everywhere.

This could be your solution:



Compact enclosures are based on high-quality standard components and permit simple and flexible configuration:

– Optimum corrosion protection
– Practice-oriented materials and variants
– The perfect dimensions for every purpose
– Functional system accessories for all typical applications

Example: Compact system enclosure CM

Interior installation: Heavy-duty shelves and 19″ system components

Material:
– Enclosure: Sheet steel, 1.5 mm
– Door: Sheet steel, 2.0 mm, all-round foamed-in PU seal
– Mounting plate: Sheet steel, 3.0 mm, zinc-plated

Surface finish:
– Enclosure and door: Dipcoat-primed, powder-coated on the outside, textured paint

Protection category IP to IEC 60 529:
– IP 55 with selection of the appropriate gland plates or trim panel

Load capacity:
– Support rail (shelf): max. 350 kg
– 19″ level: 40 kg per mounting angle

Potential equalisation:
– 2 fixed earthing points

This could be your solution:



Compact enclosures are based on high-quality standard components and permit simple and flexible configuration:

– Optimum corrosion protection
– Practice-oriented materials and variants
– The perfect dimensions for every purpose
– Functional system accessories for all typical applications

Example: Compact system enclosure CM

Interior installation: 19″ system components

Material:
– Enclosure: Sheet steel, 1.5 mm
– Door: Sheet steel, 2.0 mm, all-round foamed-in PU seal
– Mounting plate: Sheet steel, 3.0 mm, zinc-plated

Surface finish:
– Enclosure and door: Dipcoat-primed, powder-coated on the outside, textured paint

Protection category IP to IEC 60 529:
– IP 55 with selection of the appropriate gland plates or trim panel

Load capacity:
– 19″ level: 40 kg per mounting angle

Potential equalisation:
– 2 fixed earthing points

Rittal – The System.

Faster – better – everywhere.

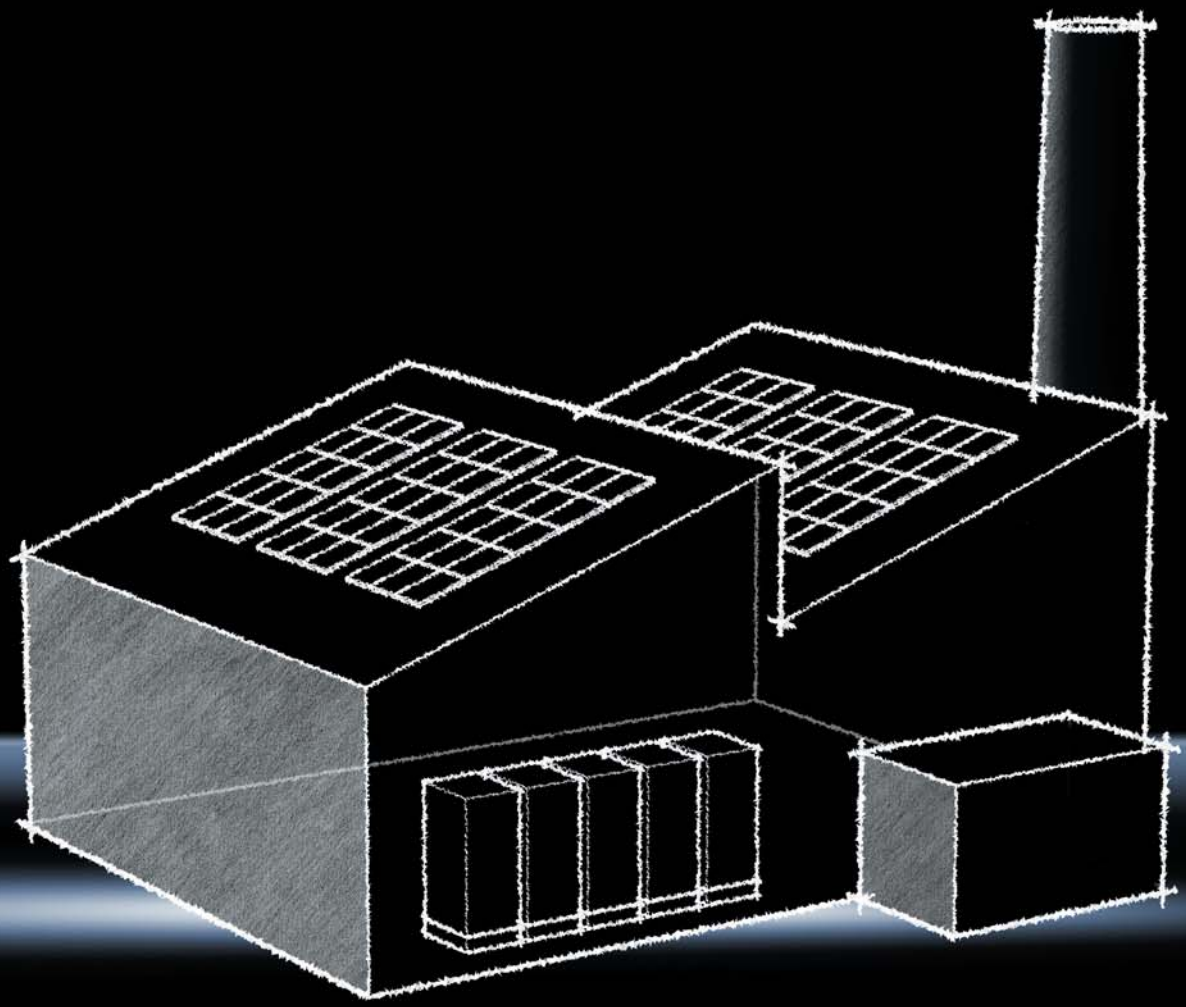

ENCLOSURES | POWER DISTRIBUTION | CLIMATE CONTROL | IT INFRASTRUCTURE | SOFTWARE & SERVICES

FRIEDHELM LOH GROUP

RITTAL

Flexible solutions for industry

In industrial applications, flexibility and scalability play a major role. This is where the TS 8 baying systems are able to play out their strengths. Practically no limits are placed on the energy storage capacity, thanks to the sheer endless baying possibilities and integration into a standard container. Optimum climate control matched to the individual installation conditions – that goes without saying.

Situation

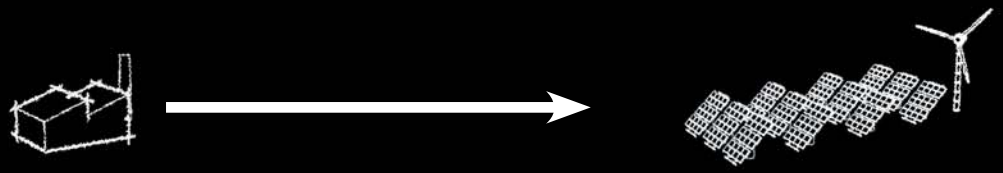

Enclosure



Climate control



Rittal – The System.

Faster – better – everywhere.



This could be your solution:

The TS 8 baying system opens up new practice-oriented perspectives for enclosure system configuration:

– High load-bearing capacity of the TS rails up to 1,400 kg
– Pre-defined rack-mounted systems ensure fast replacement of the battery packs
– Modular 19″ rack-mounted components
– Heavy-duty shelves for loads up to 100 kg per level

Example: Baying systems TS 8

Interior installation: Heavy-duty shelves or 19″ system components

Material:
– Enclosure frame: Sheet steel, 1.5 mm
– Roof: Sheet steel, 1.5 mm
– Door: Sheet steel, 2 mm
– Rear panel: Sheet steel, 1.5 mm
– Gland plates: Sheet steel, 1.5 mm
– Mounting plate: Sheet steel, 3 mm

Surface finish:
– Enclosure frame: Dipcoat-primed
– Roof, door and rear panel: Dipcoat-primed, powder-coated on the outside, textured paint
– Gland plates and mounting plate: Zinc-plated

Protection category IP to IEC 60 529:
– IP 55

ENCLOSURES | POWER DISTRIBUTION | CLIMATE CONTROL | IT INFRASTRUCTURE | SOFTWARE & SERVICES

RITTAL

FRIEDHELM LOH GROUP

This could be your solution:

Rittal offers a diversity of solutions for container climate control, catering for every application and size of container: From baying concepts with LCP cooling systems (Liquid Cooling Package), via hot and cold aisle containment, to underfloor solutions with precision CRAC cooling units and all the chillers required for the operation of cooling and climate control systems.

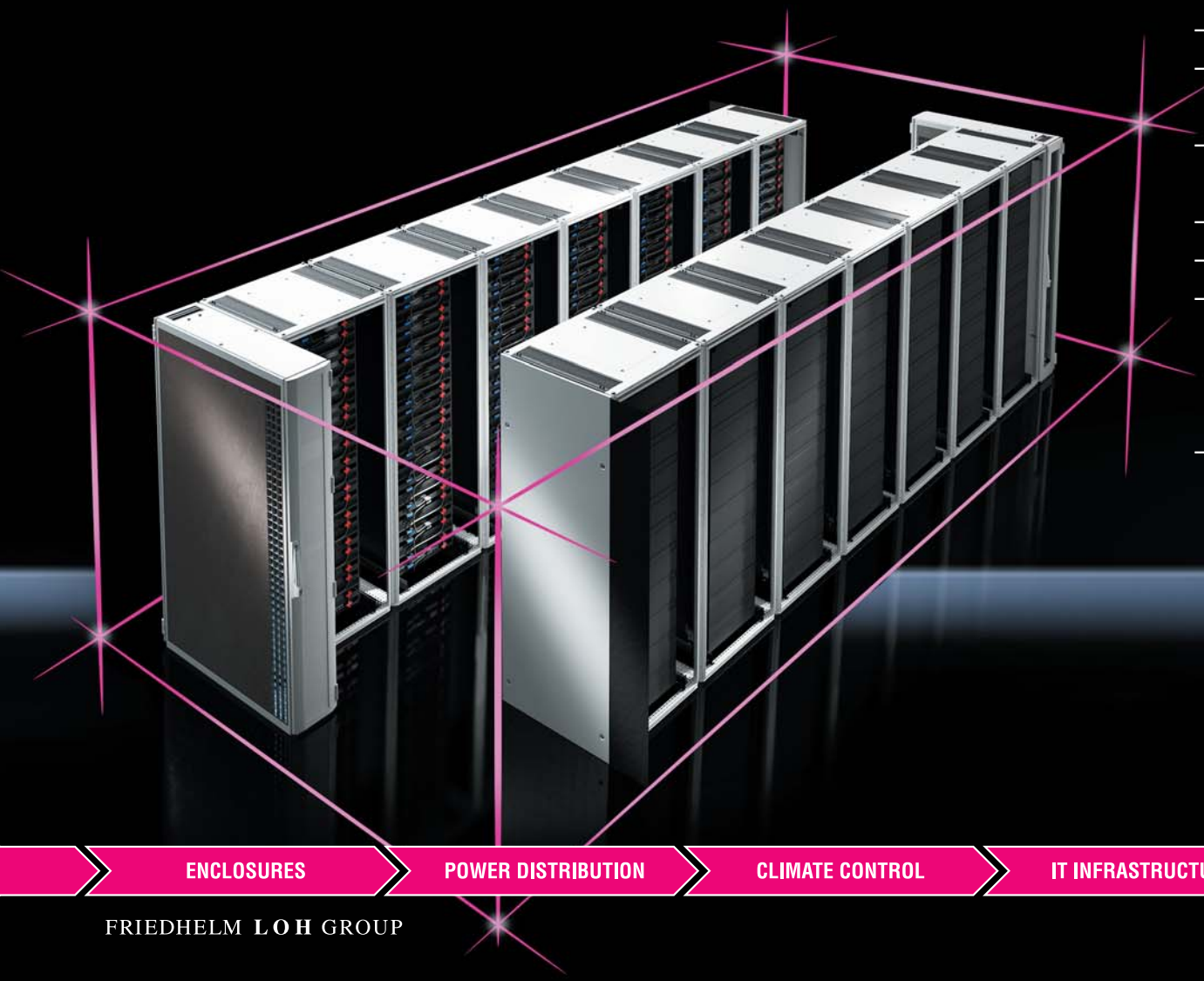

Example: Container solution

– Power distribution systems up to 5,500 A
– Enclosure systems with heavy-duty shelves or 19″ system components
– Modular configuration of the cooling units, for perfect matching to the power losses
– Aisle containment
– Cooling unit controllers and temperature displays
– CMC III monitoring software with network integration and a broad spectrum of sensors, e.g. temperature measurement, air flow, vandalism detection, humidity, smoke alarm and more
– Project support from Rittal from the very beginning

Rittal – The System.

Faster – better – everywhere.



Rittal Therm – Precise and efficient climate control

Rittal Therm takes care of otherwise complex calculations of the required climate control output and generates an appropriate selection of products.

Rittal RiCAD 3D – Greater efficiency in system design

Whichever CAD system you use, RiCAD 3D helps you to maximise the efficiency and productivity of your plant design work. It includes both 2D and 3D drawings for virtually all Rittal products, together with an extensive range of system accessories.

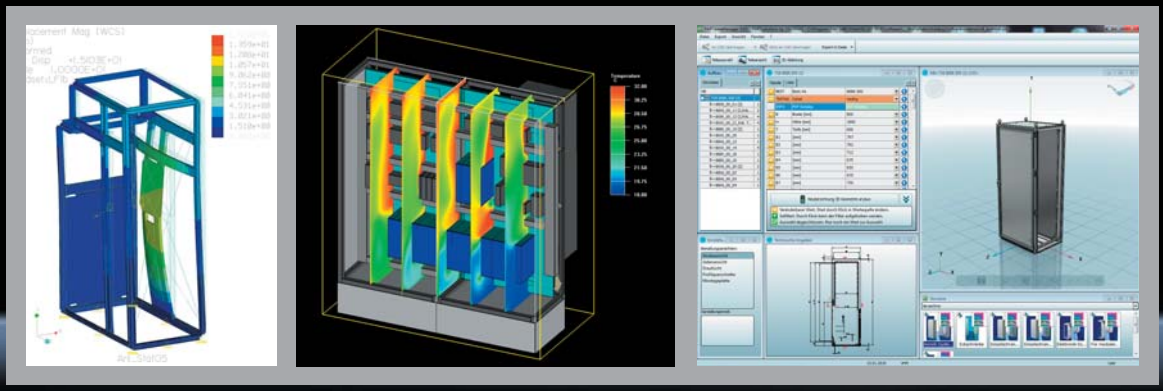

Rittal also offers possibilities for individual FEM and CFD analyses on a project-specific basis.

ENCLOSURES | POWER DISTRIBUTION | CLIMATE CONTROL | IT INFRASTRUCTURE | SOFTWARE & SERVICES

FRIEDHELM LOH GROUP

RITTAL

Simple planning

EPLAN offers software-based engineering solutions for mechatronic configuration, alongside tailored CAD, PDM, PLM and ERP interfaces for consistent data use during the product development phase.



EPLAN platform technology

The EPLAN platform integrates expert systems for the various fields of project planning, such as EI&C, fluid and electrical engineering and switchgear assembly.
A common database and identical basic functions guarantee high project quality and support a mechatronic approach to engineering.

Rittal – The System.

Faster – better – everywhere.

For further information,
scan the QR code or visit
www.rittal.com/qs-video

Optimum surface protection

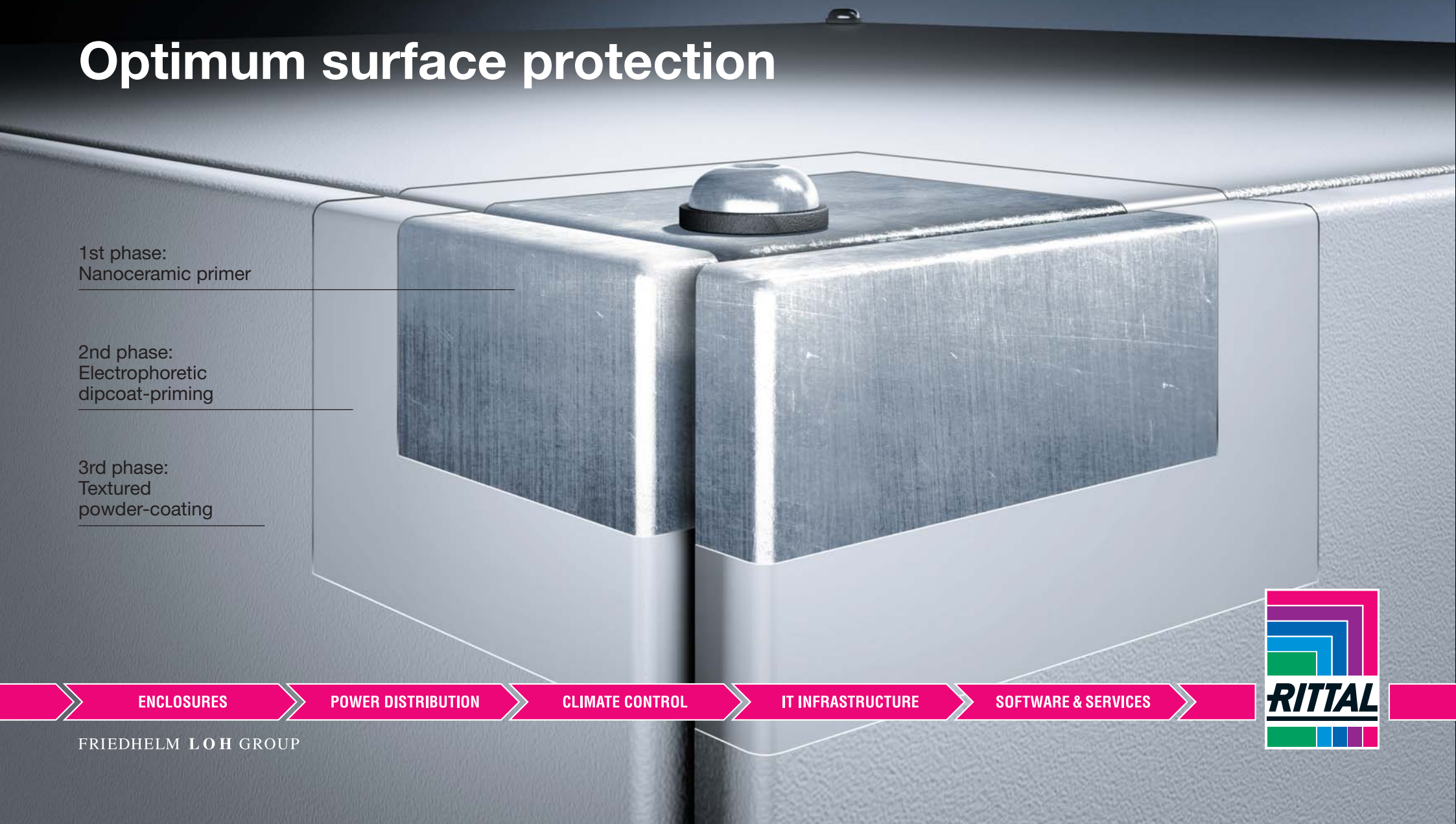

ENCLOSURES | POWER DISTRIBUTION | CLIMATE CONTROL | IT INFRASTRUCTURE | SOFTWARE & SERVICES

RITTAL

FRIEDHELM LOH GROUP

Enhancing your safety

Enclosures serve not only to protect the installed electrical equipment against environmental influences. They also ensure the safety of persons living and working in their immediate vicinity, for example as protection against the risk of electric shocks. The demands placed on these protective and safety functions are defined for different sites, branches and applications in corresponding standards, guidelines and approval conditions. These specifications form the basis for numerous tests and verification procedures which must be passed to demonstrate the conformity of an enclosure. One of the best-known classifications for enclosures is the IP protection category to IEC 60 529, i.e. protection against the ingress of foreign objects, dust and water. To guarantee the constant quality of such protection also in the longer term, a standardised manufacturing and coating process is imperative.

International approvals and certifications:

Rittal products boast a wealth of internationally recognised approvals and certifications and comply with the most exacting and globally recognised quality standards.

- All components are subjected to the most stringent testing in accordance with international standards and regulations
- The consistently high product quality is ensured by a comprehensive quality management system
- Regular production inspections by external test institutes guarantee compliance with global standards

Worldwide at your service:

Round the clock. Around the globe. The smooth running and uninterrupted operation of your equipment, systems and IT environments is always a key concern – from the very beginning and wherever you are.

We have thus devised a service package to ensure that "Rittal – The System." meets your requirements in every respect:

- Hotline on standby 24 hours a day, 7 days a week, 365 days a year
- Guaranteed response times after receipt of a fault notification
- Graduated service packages
- Global maintenance and spare parts service

Rittal – The System.

Faster – better – everywhere.



ENCLOSURES | POWER DISTRIBUTION | CLIMATE CONTROL | IT INFRASTRUCTURE | SOFTWARE & SERVICES

FRIEDHELM LOH GROUP

RITTAL

Safety from day one

In cooperation with other leading representatives of the sector, the German Energy Storage Association (BVES) has published a set of safety guidelines for users of Li-ion home battery storage systems (see USB stick), as a means to promote the safe implementation of energy storage. Rittal also contributed actively to the elaboration of the guidelines. The excerpt here illustrates how Rittal solutions support safe operation in respect of different potential hazards. To simplify your work with the safety guidelines, we have included a corresponding planning tool on the enclosed USB stick. Indeed, it holds a diversity of useful information in store – delve in and see for yourself.

Rittal – The System.

Faster – better – everywhere.

Catalogue of safety objects	Hazard sources	Intended safety objective	Which standards cover this	Possible preventive measures	Rittal measures
6.3.1	External short circuit (battery side)	Avoidance of external short circuits, and maintenance of safe condition in the case of a short circuit	UN38.3, EN 50272-2, IEC 62619, DIN EN 62109-1	Covering contact poles, securing against shutdown and against restart during transport, insulated tools, removal of body jewelry (information in instruction manual), casing with appropriate IP protection, sealing of conductive system components with electric shock protection (IPXXB internal)	■ Power distribution system with integrated shock-hazard protection ■ Enclosure systems with protection against foreign objects and moisture up to IP 66
6.3.5	Excess and too low temperature	The same safety objectives apply as at the battery level	DIN EN 62619 6.1.4.4	Derating through reduction of charging or discharging current, heating of battery, cooling of battery, selection of installation site (indoor, outdoor, shaded etc.)	■ Effective and comprehensive climate control solutions for enclosures and containers, tailored precisely to individual requirements
6.3.6	Mechanical damage from outside	Sufficient durability of construction against oscillations, vibrations, shock	UN38.3, DIN EN 50272, DIN EN 62109-1, impact test IK pursuant to IEC 62262	Suitably stable construction of casing, transport handles, fixing points, shock absorbing mounting of critical components in the system, shock indicators for transport, warning labels on equipment, information in operating manuals regarding safe transport and installation	■ Brochure with load specifications and enclosure assembly instructions with notes on safe transport and installation ■ Enclosures with IK impact test rating to IEC 62262 ■ Earthquake kit for regions subject to earthquake risks
6.3.10	Hazardous touch-voltage	Hazardous touch-voltages may not come about in single-fault cases!	VDE AR 2510-2/-50, VDE 0100/410, EN 50272-2, IEC 62619, DIN EN 62109-1	Installation, adherence to normative clearance and creepage distances, safety ladder must be installed so that it is disengaged last when cable tension occurs, grounded casing, protection against contact for components with hazardous touch-voltages	■ Power distribution system with integrated shock-hazard protection ■ Power distribution components tested to verify compliance with creepage distances and clearances defined in the relevant standards ■ Potential equalisation for enclosures by way of integrated earthing points
6.3.13	Harmful emissions (gaseous, liquid, solid)	Contaminant-laden liquids must not be released from the system. Hazardous gases must (in the case of an accident) be appropriately discharged/released.	UN38.3, VDE AR 2510-2/-50, EN 50272-2, BATSO 02, IEC 62619	Constructive measures to contain, collect or discharge hazardous substances in a contained manner (collection pans, drip protection, events etc.); if necessary, dilution by way of active ventilation; casing with appropriate IP protection	■ Enclosure systems with protection against foreign objects and moisture up to IP 66 ■ Fan systems for active air flow control
6.3.15	Production and design flaws	Avoidance of safety-relevant production and design flaws	E DIN EN 62619 Chap. 5.6 (Quality assurance plan)	For procedures and process for inspection of materials and components, in particular of the cell	■ Own accredited test laboratory ensures the best possible quality assurance and compliance with worldwide standards
6.4.1	Inadequate mechanical processing	Safe and stable mechanical design (no sharp corners and edges, crushing points) for safe installation, handling and operations as well as checks during installation for mechanical stress factors.	IEC 62619	———	■ Brochure with load specifications and assembly instructions for enclosure installation

www.bves.de

Excerpt from the “Safety Guidelines – Li-Ion Home Battery Storage Systems”

Catalogue of safety objects	Hazard sources	Intended safety objective	Which standards cover this	Possible preventive measures	Rittal measures
6.4.2	Vandalism	Basic protection against attempts to break in and against external mechanical or physical forces, including the use of simple tools (RC2 = screwdriver, pliers, wedge etc.) inso-far as the system is public or accessible by third parties, or if such access is planned	EN 50272-2, Impact test IK IEC 62262	Stable casing, use of locks, selection of materials, selection of installation site (lockable rooms etc.). Clear information/requirements on the installation site in the operating manual.	■ Extensive range of lock systems for enclosures ■ Accessories to permit documentation to be kept in the enclosure ■ Accessories for enclosure labelling and identification
6.4.3	Fire	Fire from inside and outside; basic resistance against heat/fire, prevention of spreading of fire from inside to outside, as well as of bursting. Prevention of transmission of external fires	EN 50272-2, EN 61010-1; BATSO 02, E-VDE AR 2510-50 et al.	Prevention of fire acceleration, selection of appropriate designs (casing, partitions etc.), requirements on installation site in the installation manual, selection of materials for the casing, construction according to fire safety regulations as found in state building code.	■ Busbar system with flame-retardant insulation materials (V0) ■ Fan-and-filter units and climate control components with flame-retardant insulation materials ■ Enclosures manufactured in painted sheet steel or stainless steel
6.4.4	Lightning/ electrical surge	Short-term/transient overvoltage/overcurrent may not have an influence on system safety, consideration of selectivity	VDE 0100/440, VDE 0185-305, IEC 62619	Overvoltage/surge protection (coarse, medium, fine) (safety-relevant BMS can require fine protection grade)	■ Power distribution components tested to verify compliance with creepage distances and clearances defined in the relevant standards ■ Power distribution components tested to verify compliance with the overvoltage categories defined in the relevant standards
6.4.5	Contamination	Avoidance of unsafe operating conditions through contaminations such as dust, liquids and foreign objects	IEC 62619 E-VDE AR 2510-50	Clearance and creepage distances, depending on the expected degree of contamination, as well as labeling, must be permanently visible, air intake filters and regular maintenance, casing with appropriate IP protection	■ Enclosure systems with protection against foreign objects and moisture up to IP 66 ■ Fan systems for active air flow control ■ Tested, low-maintenance fan-and-filter units (F14)
6.4.7	Special environmental requirements (corrosion, gases, flooding)	For intended installation conditions in a corrosive atmosphere or where there is the risk of flooding, special requirements must be taken into account in the design of the system.	E-VDE AR 2510-2, BATSO 02	Clear information regarding installation site in the installation manual, proper selection of insulation depending on the environmental conditions	■ Triple surface treatment provides optimum protection against corrosion: + Nanoceramic primer + Electrophoretic dipcoat-priming + Textured powder-coating ■ Many enclosure sizes available in stainless steel as standard, in order to provide the best possible corrosion protection
6.4.8	Compliance with legal requirements	Compliance with Low Voltage Directive, Product Safety Act, Battery Act, EMC Directive, UN Transportation Tests, Hazardous Goods Act and others	———	———	■ Approval according to product standards, e.g. IEC 62208 ■ Approval according to system standards, e.g. IEC 61439 ■ Compliance with the European Low Voltage Directive ■ Rittal products represent the state of technology demanded by laws and standards

www.bves.de

Rittal – The System.

Faster – better – everywhere.

adstec Energy Storage

AKASOL High Performance Battery Systems

BOSCH

caterva Mit der Sonne im Netz

Durion ENERGY

kOLIBRI® DER STROMSPEICHER

Leclanché

Firmly anchored on the market

Rittal is well established in the market for energy storage solutions. And the best proof of that is undoubtedly a list of references with leading names from across the sector. Put our promise to the test. We would be pleased to elaborate on the optimum solution for your energy storage needs.

LG화학
LG Chem

LIACON Batteries

Panasonic

REFUenergy

saft

SAMSUNG SDI

VARTA Storage

voltaVision

References

ads-tec GmbH

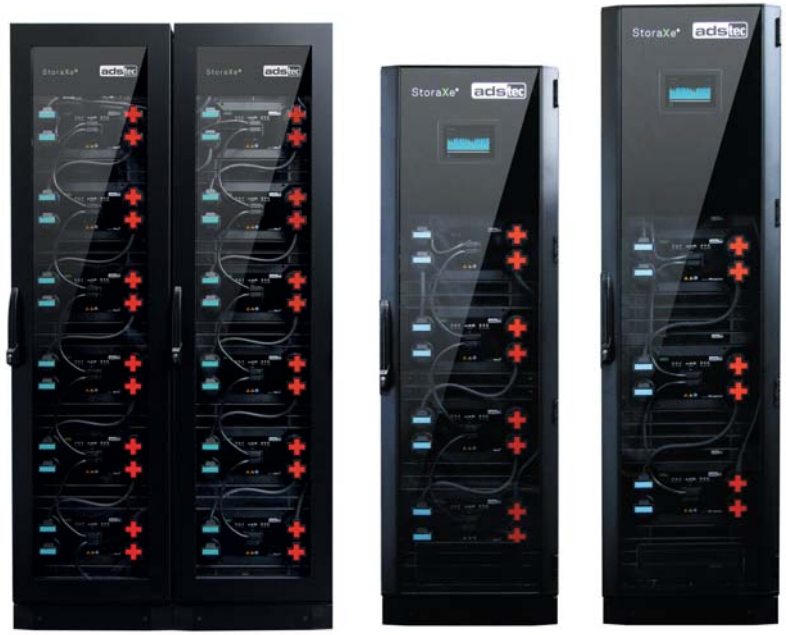

StoraXe® lithium-ion battery storage systems from ads-tec for both Industrial & Infrastructure and Home & Small Business applications. The modular design of both the Rittal TS 8 enclosure system and the battery storage system, coupled with comprehensive IT management, create virtually limitless scaling options for the ads-tec StoraXe® solutions – 100% “Made in Germany” technology.

AKASOL GmbH



With neeoSystem solar energy storage systems from AKASOL, operators of medium-sized and large plants have access to solar power even if the sun isn't shining. The neeoSystem is housed in an intelligent Rittal TS 8 enclosure system and offers a scalable system design with up to five neeoRacks. This allows households and companies to meet up to 70% of their own consumption and minimise electricity purchased from the grid.

References

Robert Bosch GmbH



The “Green Compact” solution from Bosch is ideally suited to smaller applications. This solution (6 kW/18.6 kWh) was developed for residential and commercial users looking for an independent, affordable and clean power supply. Increasing these users' own consumption of local, renewable energy helps to reduce grid congestion.



The “Green Community” solution from Bosch is the perfect addition to decentralised energy generation. The shift towards renewable energy sources requires a local, decentralised energy supply. The “Green Community” solutions (22 – 75 kW/37 – 372 kWh), combined with installed photovoltaic (PV) and combined heat-and-power (CHP) systems, match decentralised generation with local demand.

References

Caterva GmbH





The Caterva energy storage system, with its ultra-efficient, long-life lithium-ion batteries, networks with other installed Caterva systems, producing a grid service which generates additional revenues for Caterva. In selecting an enclosure, Caterva opted for the Rittal TS 8 system, plus additional climate control and system accessories from Rittal.

References

Durion Energy GmbH





Energy storage solutions from Durion Energy are synonymous with premium quality and industrial standards throughout the entire output range, from just a few kWh to large numbers of MWh. The modularity and easy scalability of the storage system is perfectly complemented by the baying concept of the Rittal TS 8 enclosure system.

References

“Efficiency House Plus” Berlin





The high-tech “Efficiency House Plus” in Berlin is a masterpiece in home design: It generates more energy than it consumes. At its heart is a buffer battery with a storage capacity of 40 kW, made from recycled car batteries from BMW electric Minis. The battery itself is securely housed in a Rittal outdoor enclosure.

References

Kolibri Power Systems AG







Kolibri Power Systems is the leading manufacturer of intelligent battery storage systems based on a unique, proprietary solid cell technology.
In selecting an enclosure system, Kolibri has opted for the extensive Rittal range, in keeping with its top-quality philosophy.

References

LG Chem Ltd.





LG Chem has devised a 482.6 mm (19″) system which covers a broad output range; anything is possible, from just a few kWh to a large number of MWh. The Rittal TS 8 enclosure system allows LG Chem to combine maximum space efficiency with exceptional output versatility. The LG Chem system is completed by a tested battery management system and a battery protection unit which allows simple, intelligent monitoring without the need for routine on-site servicing.

References

LIACON GmbH



LIACON Batteries provide energy storage systems for heavy-duty applications. Electrode films manufactured in-house at its factory in Germany are transformed into high-performance lithium titanate polymer cells with up to 20,000 full charge and discharge cycles and extremely high levels of intrinsic safety. These are assembled and installed in modular enclosures with a proprietary battery management system. The modular storage solution, freely scalable from 5 kWh up to > 1 MWh storage capacity, adapts readily to customer requirements. In keeping with such a high-end, robust and powerful product, the manufacturers have opted for a Rittal enclosure because “as well as supplying an excellent product, Rittal also offers the most experience, best advice and outstanding quality”, says Catharina Pape of LIACON Batteries.

References

REFU Elektronik GmbH





The REFUstation+ is the perfect solution for off-grid and network support at the very highest level. The REFUstation+ offers a dual power supply network, in which the high-quality REFUstation is backed up by a generator system. Fitted out with Rittal TS 8 enclosures, the system is designed for decades of reliable use.

References

VARTA Storage GmbH





Engion energy storage systems from VARTA Storage store the solar energy generated in battery modules, so that the electricity is available for use when needed. With a service life of up to 20 years, this represents a sound investment. A Rittal TS 8 enclosure was chosen to house the product, ensuring that the mechanical service life equals that of the batteries inside.

Voltavision GmbH





Voltavision GmbH, a development and test centre for power electronics and battery systems, has developed and manufactured a stationary storage unit to supply power to charging stations for electric vehicles, as part of a collaborative project with TÜV Nord. The tried-and-tested Rittal TS 8 baying system was chosen for this project. Two TS 8 enclosures house the battery system, while a third contains the power electronics.

Rittal – The System.

Faster – better – everywhere.

- Enclosures
- Power Distribution
- Climate Control
- IT Infrastructure
- Software & Services

You can find the contact details of all
Rittal companies throughout the world here.

www.rittal.com/contact

XWW00001EN1504

ENCLOSURES | POWER DISTRIBUTION | CLIMATE CONTROL | IT INFRASTRUCTURE | SOFTWARE & SERVICES

RITTAL

FRIEDHELM LOH GROUP