# Rittal – **CRAC systems**



## Fresh power
## for data centres and server rooms

FRIEDHELM LOH GROUP

RITTAL®

# IT-specific climate control

Modern IT climate control technology ensures optimum thermal conditions in rooms exposed to high loads, such as data centres and server rooms. The main aim here is to ensure constant temperatures and precise humidity levels. Continuous-operation designs and redundant systems ensure that all key functions are maintained.

Rittal CRAC systems dissipate waste heat from the IT equipment on demand, ensuring that the overall system operates in the most energy-saving way possible.



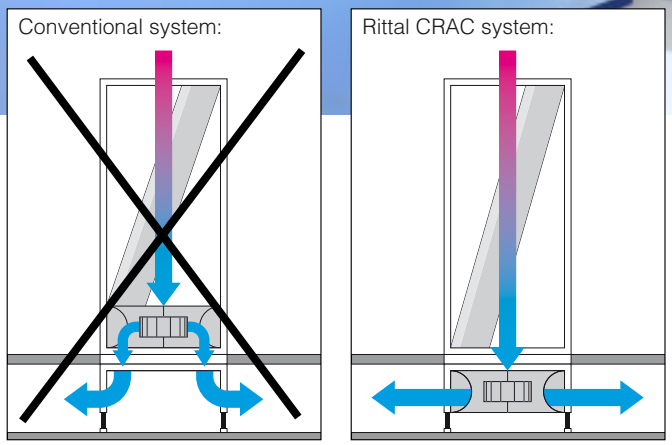


The fan is positioned inside the raised floor. This facilitates a larger heat exchanger area, as well as a larger filter area. This configuration is designed to minimise internal installation and deflection losses. In turn, the reduced power consumption (Δ Pw) produces considerable energy savings.

**Advantages of the new technology**

- No losses from flow deflection, and no loss of installation height
- Optimum cold air distribution
- Superior cooling output
- Enlarged heat exchanger and filter area
- Low energy consumption and space requirements

**Rittal CRAC systems are used for base load cooling of computer rooms.**

The systems, based on the tried-and-tested Rittal TS 8 enclosure system, are equipped with a heat exchanger in the upper section. Underneath the raised floor is a high-efficiency EC radial fan which blasts cooled air into the raised floor without any further deflections.

## Applications:

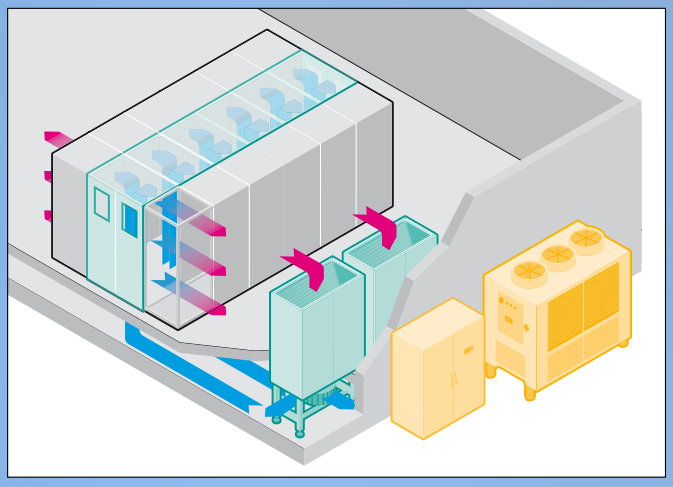

**Combination with cold aisle containment**
Here, CRAC systems are used in conjunction with Rittal cold aisle containment. The system is designed with 1+1 redundancy.

The hot air expelled at the rear of the cold aisle containment is drawn in freely from the room and processed. After filtering and cooling, and with optional additional dampening or drying, the air is returned to the raised floor, which serves as a hollow space through which the air is routed.

**Benefits:**
- Supports high return air temperatures of more than 30°C
- Very high level of efficiency

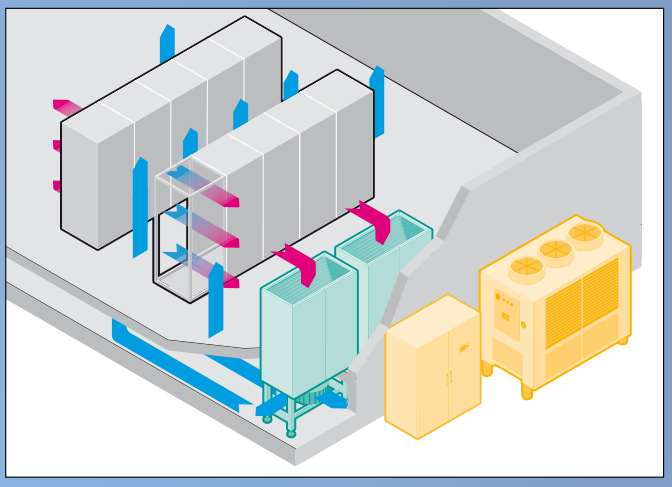

**Combination without cold aisle containment**
Here, CRAC systems are used in conjunction with standard air distributors, making use of the hollow space beneath the raised floor. The system is designed with 1+1 redundancy.

The heated air is drawn in freely from the room and processed. After filtering and cooling, and with optional additional dampening or drying, here too the air is returned to the raised floor, which serves as a hollow space through which the air is routed.

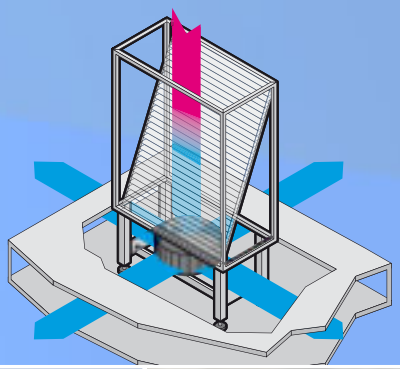

**CRAC system**
Cold water variant:
In this design, the customer's in-house cold water system is used as the cooling medium, for example, with a water/antifreeze mixture. In IT applications, the aim is to achieve dry cooling with no condensation at an inlet temperature of between 10°C and 14°C.

Refrigerant variant:
This design comprises the key components of a cooling circuit (compressor, evaporator coil and expansion valve). These systems require a condenser sited outdoors and a coolant pipeline system in order to function.

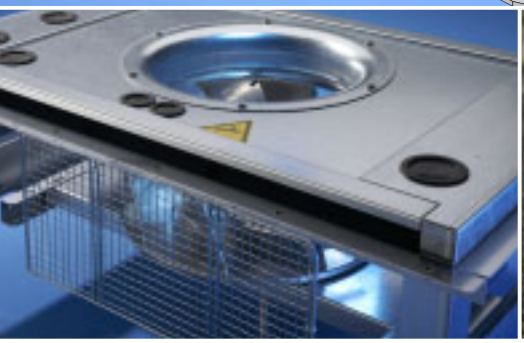





A high cooling output with a small footprint and minimal power consumption ensures long-term benefits in terms of operating costs.

The high efficiency of the Rittal CRAC system is attributable primarily to the optimised arrangement of the fan in the raised floor.

This allows the heat exchanger to be enlarged and internal losses minimised.

Commissioning, maintenance and servicing work is minimal. All elements are readily accessible, and the compact enclosure dimensions allow them to be used even in less-than-ideal siting conditions.



## Enclosure/supporting structure

**Enclosure**
- Twin-walled design with integral thermal insulation for a high level of enclosure rigidity and optimum sound insulation
- Smooth internal surfaces reduce flow losses
- Highly accessible, thanks to removable enclosure panels on all sides
- Stable profile frame structure based on the tried-and-tested TS 8 enclosure system
- The electrical part and the controller for the air treatment system are shielded, allowing repairs and maintenance to be carried out with the system operational

**Supporting structure**
- Vibration-insulated feet
- Individually height-adjustable (adjustment range 50 mm)
- Special heights available to order
- For low raised floor heights, the supporting structure protrudes from the raised floor, with precise-fit panelling in the TS 8 enclosure system



## Control/regulation

Rittal CRAC systems are fitted as standard with a controller.

**Electrical part**
- The controller and the power pack are contained in the base unit
- Standardised contactor motor circuit breaker combination to protect the built-in components
- Electrical part shielded from the airflow
- Contact hazard protection with plexiglass cover
- Keyed connectors for fans and sensors

**Operator terminal**
- LCD display, 8 lines, 22 characters
- 6 keys with LED check-back signal
- Acoustic alarm signal
- Front installation
- Protection category IP 65

**Controller**
- Microprocessor 16 bit, 16 MHz, 256 KB RAM
- Clock, battery-buffered
- RS485 interface for p-LAN
- Display connection
- Program storage on non-volatile flash memory



## Motor/heat exchanger

**Fan motor unit**
- High-capacity radial fan with EC motor technology in the supporting structure; easily pulled out forwards
- The fan speed is set via EC controller according to the individual volumetric flow

**Heat exchanger**
- Large-scale Cu/Al heat exchanger
- Easily accessible for cleaning work
- Low flow speed means minimal pressure loss
- Aluminium condensate tray, easily removed and cleaned
- Self-filling shut-off siphon

**Filter**
- Circulating filter in cassette form (filter class G4, optionally F5 or F7)
- Continuous filter monitoring via differential pressure sensor
- Filter may be replaced from the front

**Pump cold water**
- Cooling circuit fully plumbed internally, including constant 2-way cold water valve

**2-way valve**
- Variant with screw connections
- Material: brass or red bronze
- Good accessibility
- Easy on-site connection



## Optional components

**Humidifier (optional)**
- Electrode vapour humidifier for fully automated production and emission of mineral-free, odourless, sterile vapour
- The humidifier has a microprocessor controller and automatically adapts to the existing water conductivity (auto-adaptive)
- Direct connection to all standard water supply systems

**Electric heater (optional)**
- Bare-tube stainless steel heating rods
- Triple protection against short-circuits and overheating, thanks to miniature circuit-breaker, circuit-breaker and safety thermostat, constantly regulated

## Useful cooling output 18 – 118 kW



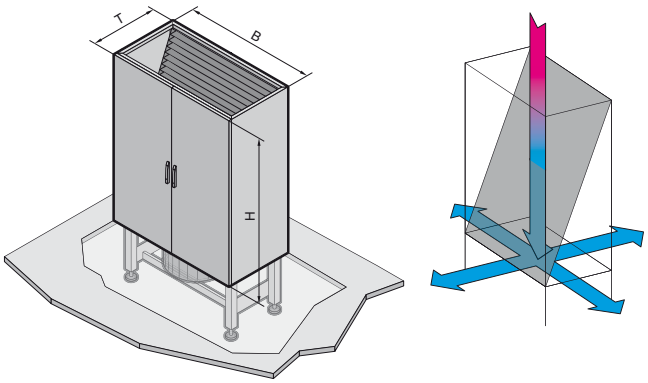


B = Width
H = Height
T = Depth

**Functional principle:**
The CRAC system draws warm waste air from the top of your data centre, cools it with either water or refrigerant in a closed heat exchanger, and blows the cooled, filtered supply air into the raised floor with overpressure.

**Equipment:**
User-friendly, high-quality control with an extensive range of functions and connectivity.
Space-saving, readily accessible, high-efficiency fan.
Flow and energy-optimised special heat exchanger with a generous safety factor.

**Benefits:**
- The unit is available in a broad output range, and for a variety of cooling media.
- The unit supports optimum integration of both hardware and software.
- Optimum energy and space efficiency thanks to intelligent design features, such as the slanted heat exchanger and base-integrated fan.
- Frame based on the popular TS 8 system.

| **Model No. SK** | **Without heater** | **3301.620** | **3301.660** | **3301.830** | **3301.870** | **3300.510** | **3300.560** | **3300.710** | **3300.760** |
|---|---|---|---|---|---|---|---|---|---|
| **Model No. SK** | **With heater** | **3301.630** | **3301.670** | **3301.840** | **3301.880** | **3300.520** | **3300.570** | **3300.720** | **3300.770** |
| **Model No. SK** | **With humidifier** | **3301.640** | **3301.680** | **3301.850** | **3301.890** | **3300.530** | **3300.580** | **3300.730** | **3300.780** |
| **Model No. SK** | **With heater and humidifier** | **3301.650** | **3301.690** | **3301.860** | **3301.990** | **3300.540** | **3300.590** | **3300.740** | **3300.790** |
| **Useful cooling output[1)]** | | **23 kW** | **39 kW** | **78 kW** | **118 kW** | **18 kW** | **30 kW** | **43 kW** | **54 kW** |
| Operating voltage V/Hz | | 400/50 | 400/50 | 400/50 | 400/50 | 400/50 | 400/50 | 400/50 | 400/50 |
| Dimensions mm | W<br>H<br>D | 1100<br>1950<br>650 | 1100<br>1950<br>850 | 1800<br>1950<br>850 | 2600<br>1950<br>850 | 1100<br>1950<br>850 | 1100<br>1950<br>850 | 1400<br>1950<br>850 | 1800<br>1950<br>850 |

| Cooling medium | Water[2)] | | | | Refrigerant R407C[2)] | | | |
|---|---|---|---|---|---|---|---|---|
| Volumetric airflow at an external pressure loss of 20 Pa | 6000 m³/h | 11000 m³/h | 22000 m³/h | 33000 m³/h | 6000 m³/h | 8500 m³/h | 12500 m³/h | 16000 m³/h |
| No. of fans | 1 | 1 | 2 | 3 | 1 | 1 | 1 | 2 |
| Power consumption of fans | 0.6 kW | 1.5 kW | 3.0 kW | 4.6 kW | 0.6 kW | 0.9 kW | 1.8 kW | 1.7 kW |
| Start-up current of fans | 1.8 A | 4.6 A | 9.2 A | 13.8 A | 1.8 A | 4.6 A | 4.6 A | 9.2 A |
| Max. speed | 1150 rpm | 1200 rpm | 1200 rpm | 1200 rpm | 1150 rpm | 1200 rpm | 1200 rpm | 1200 rpm |
| No. of compressors | – | | | | 1 | 2 | 3 | 3 |
| Power consumption of compressors | – | | | | 5 kW | 8.8 kW | 13.1 kW | 15 kW |
| Start-up current of compressors | – | | | | 13.1 A | 25.6 A | 38.4 A | 39.3 A |
| Type of connection | Terminal strip | | | | – | | | |
| Weight | 300 kg | 360 kg | 550 kg | 770 kg | 455 kg | 505 kg | 585 kg | 935 kg |
| Noise output | 75 dB (A) | 79 dB (A) | 82 dB (A) | 84 dB (A) | 74 dB (A) | 74 dB (A) | 81 dB (A) | 76 dB (A) |
| Filter quality to DIN EN 779 | G4 | | | | G4 | | | |

[1)] Output figures less heat from the fans.
CW: 26°C/45 % air inlet and 10°C/15°C water temperatures DX: 26°C/45 % air inlet and 50°C condensation temperature
[2)] Other media available on request.
Other options available on request. We reserve the right to make technical modifications.

## Turnkey philosophy

Rittal recommends its turnkey philosophy for cooling IT operating environments.

This refers to a complete cooling solution, from the IT chiller through to energy-efficient refrigeration with free cooling concepts, including the entire Rittal piping system with hydraulic separating filter and redundant media pumping. The range also includes customised cooling units for direct cooling of hardware or for conventional cooling using a raised floor for air distribution.



# Queries and information

We will be happy to send you further information or advise you in person.

**Please send me the following brochure(s):**

- ❑ IT Catalogue
- ❑ IT News 2008
- ❑ IT Cooling Solutions

From:

Surname / first name

Company / customer no.

Department / function

Address

Telephone

E-mail

07/08 · E382

Rittal GmbH & Co. KG · Postfach 1662 · D-35726 Herborn
Telephone: +49(0)2772 505-0 · Telefax: +49(0)2772 505-2319 · eMail: info@rittal.de · www.rittal.com

Switch to perfection RITTAL